ProEquip PRO-P190

MINI PTT WITH ACOUSTIC AIRTUBE AND USB-C



A ProEquip mini PTT/microphone with acoustic airtube and USB-C, designed for smartphones that use the Airbus Agnet® application. A range of different earpieces is available for the ProEquip acoustic airtubes, in addition to those supplied with it. All this to ensures that users can choose the solution that suits them best.

FEATURES & BENEFITS

- Robust PTT with a secure metal clip
- Hi quality microphone
- Coiled cables offer better flexibility and do not tangle as easily as straight cables
- Slim size connector with metal clip for secure and reliable use
- Comes with 3 pcs of different rubber tips (1-,2- and 3-layers)
- There are also other types of eartips available, such as ProEquip EarFly inserter, ProEquip Open ear inserter and ProEquip noicereducing memory foam
- Also possible to upgrade to Hi-Def earpiece

OPTIONAL (examples)

29344	ProEquip Acoustic Airtube Hi-def Earpiece upgrade kit
60170-60176	ProEquip EarFly inserter, different sizes
60178, 60179	ProEquip Open ear inserter, different sizes
60255	ProEquip noise reducing memory foam

SPECIFICATION

Cable length from connector to mic/PTT:	60cm
Cable length from mic/PTT to acoustic airtube:	40cm
Connector:	USB-C

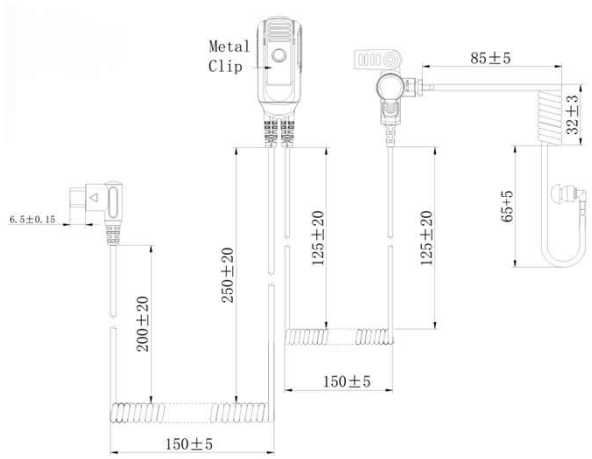

MODEL	PART.NO
ProEquip **PRO-P190 USB-C** **Slim mini PTT with acoustic airtube**	**30170**

Scan QR-Code to order online

NORTHCOM
WHEN COMMUNICATION MATTERS